AccuFlo®
SOIL INJECTOR ISD

USER MANUAL

ARBORJET | Ecologel®
PARTNERS IN PLANT CARE

Table of Contents

What's Included in your AccuFlo Soil Injector ISD Kit..... 3

AccuFlo ISD Warranty & Device Registration..... 4

Modified Backpack Sprayer Overview..... 5

Unboxing: Initial Assembly Steps..... 6

How to Operate the System..... 9

How to Flush/ Clean/ Store the System..... 13

Determining Volume and Number of Injection Sites..... 14

Calculating Dosage of Injection Sites..... 15

How to Convert to Spray and Drench Applications..... 16

Troubleshooting Guide..... 17

Winterinzation Guide..... 18

Exploded Views and Part Numbers..... 19

Contact Information..... 20

What's Included in your AccuFlo Soil Injector ISD Kit

AccuFlo Soil Injector ISD Kit (4 Gallon Backpack) – (070-3100) Or
AccuFlo Soil Injector ISD Kit (9 Gallon Roller Tank) – (070-3200)

- Soil Injector ISD Device (Box 1)
- Modified 5 Speed FlowZone Backpack or Roller tank (Box 2)
- Graduated Cylinder
- Adjustable Wrench
- Footplate Wrench (1-5/16")
- User Manual and Warranty Card
- Safety Glasses

ARBORJET®
Revolutionary Plant Health Solutions

AccuFlo ISD Warranty & Device Registration

Our Equipment is warranted for 90 days against defects in workmanship and materials. Register your device to activate your warranty and receive a FREE AccuFlo ISD Starter Kit. Warranty is only guaranteed to the initial purchasing party, from an authorized Arborjet distributor.

To Register Your Device:
Fill out the online form at arborjet.com/registerequipment OR fill out, tear off, and mail in the registration post card included in your device packaging to receive:

- A 90-day warranty against defects in workmanship
- A free starter kit of our premier marketing materials to help grow your business, and a helpful rate chart to get your started with your new AccuFlo ISD*
- Your company listed as a Service Provider on our website at arborjet.com

*Limit one per company

ARBOR MOBILE DOWNLOAD THE ARBOR-MOBILE APP FOR CONVENIENT EQUIPMENT REGISTRATION

Download on the App Store | Get it on Google play

Warranty Process:
Contact Arborjet directly for all warranty claims by emailing RMA@arborjet.com. Please do not contact your original point of purchase.

1. Locate original invoice and contact our customer service team for a Return Merchandise Authorization (RMA)
2. Once your RMA has been approved, package the item(s) appropriately, including sales receipt or invoice, write the RMA # legibly on the box, and ship to the address below:

Arborjet | Ecologel
99 Blueberry Hill Rd
Woburn, MA 01801

ARBORJET®
Revolutionary Plant Health Solutions

Modified Backpack and Roller Tank Sprayer Overview

FlowZone Typhoon 2.5V
5-Position Variable 4-Gallon Sprayer

Bulkhead Drain Line Quick Disconnect

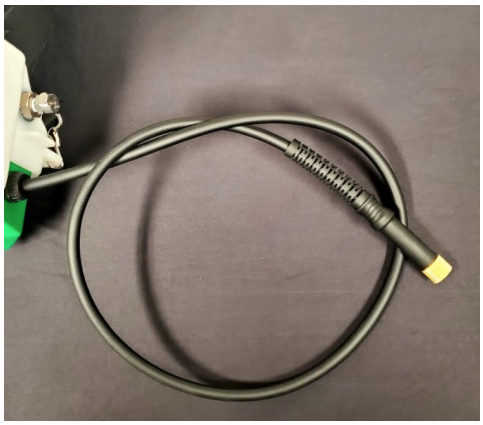

Supply Line

FlowZone Monsoon 2.5V
5-Position Variable 9-Gallon Rolling Sprayer

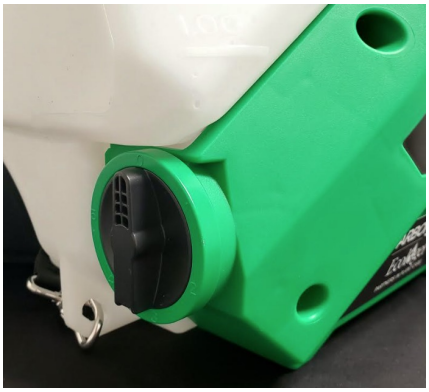

Variable Speed Adjustment Knob

ARBORJET®
Revolutionary Plant Health Solutions

Unboxing the Soil Injector: Initial Assembly Steps

1. Slide the footplate over the base of the lance

2. Twist extender and nozzle tip onto threaded lance adapter using provided Footplate Wrench

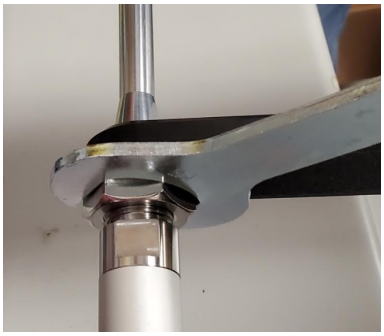

3. Position footplate facing depending on preference and tighten footplate nut to secure in place

Unboxing: Initial Assembly Steps

4. Assemble Backpack/ Roller Tank and Insert Battery.
   - Battery may require charge before operation

5. Connect Tubing coming from backpack to the female hose adapter on the supply line

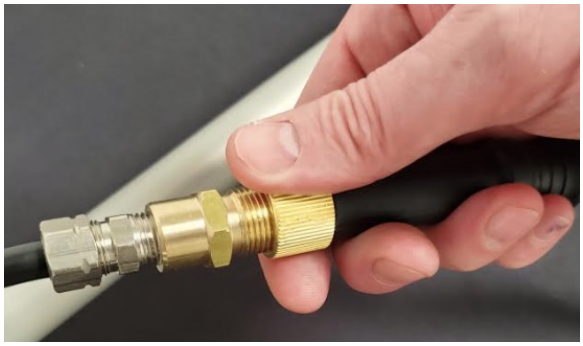

6. Connect tubing coming from the lance to the quick-connect bulkhead fitting on the backpack

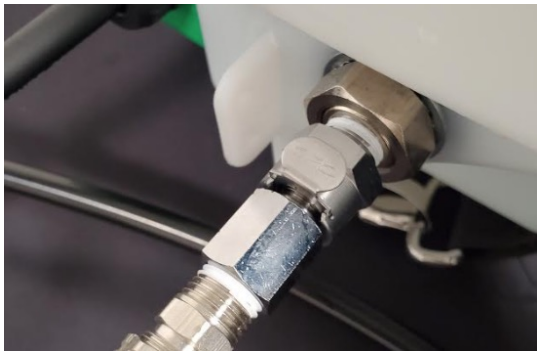

Before Your First Application…

Arborjet strongly recommends testing your equipment with water or CLEAN-jet™ before attempting to inject any of our approved Formulations.

If the box your kit came packaged in does not have security tape, or appears to have been opened or tampered with, do not use the equipment, and contact your Arborjet Distributor for replacement instructions.

Our Quality Control procedures include testing fittings with a torque wrench, calibrating the Cylinder, and using a checklist to perform an audit of contents for every kit that ships out of our facility. The checklist is initialed by the assembler and supervisor and included with your completed kit for your reference.

We understand that no measure of Quality Control can mitigate every potential issue that might arise during assembly and shipment, so a final "dry" run with water or CLEAN-jet™ will confirm fittings are sealed and eliminates the potential of losing valuable product if a leak or failure is detected.

- Arborjet Production Team

How to Operate the System – Setting the Dose

1. Set the injection dose by loosening the dose collar knob and aligning with the desired volume in mL per injection site.

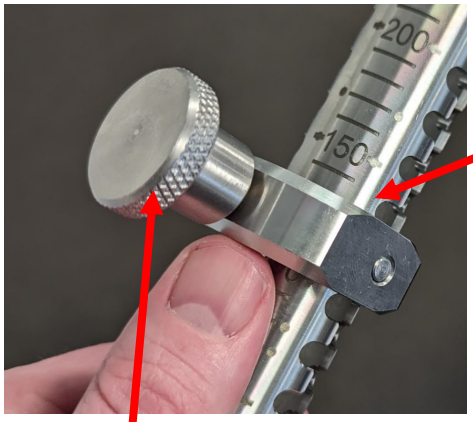

When setting dosage, make sure the top of the collar lines up with the desired dosing size

This is set for 130mL

Dose Collar Knob

2. With the knob loosened, rotate the collar into the dosing notch and gently tighten the Collar Knob to secure in place.

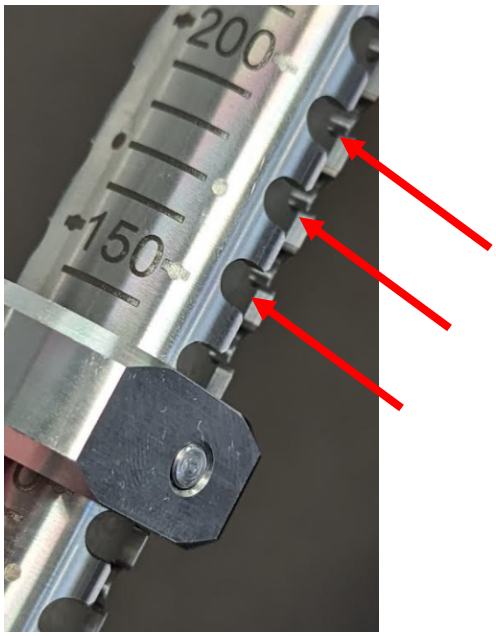

Dosing Notches

How to Operate the System – Activating the Backpack

3. Position Toggle Valve in the neutral location (center) before turning on the backpack.

Valve toggle in neutral position

4. Activate Backpack pump by turning the Variable Speed dial clockwise to the highest setting.

Fluid level must be above the supply and drain line ports in order for the backpack to run.

When the backpack is first activated, it will begin to prime the supply line, but will not fill cylinder chamber until toggle valve is moved to "fill" position. (next page)

How to Operate the System – Prime the System

5. Now that the dose has been set, and lines primed, you can begin to fill dosing chamber by moving the toggle valve to the left into the "fill" position.

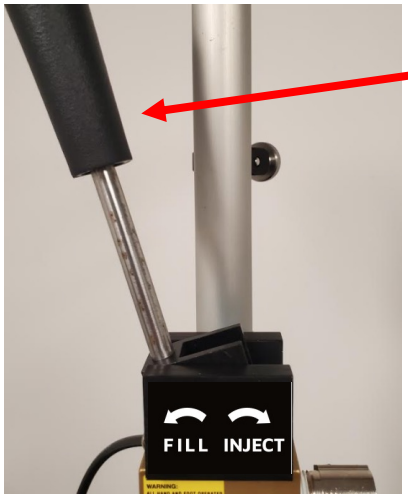

Valve toggle in fill position

When system is in the "fill" position, the backpack pump will activate and fill to the pre-set dosage level. Once the chamber is full of product, the backpack pump will deactivate.

6. With the backpack on the ground, remove the mesh strainer and submerge the tip into the reservoir, so product doesn't spray or splash during priming.

Take Caution when handling the AccuFlo Soil Injector ISD once is it fully primed. Accidentally bumping the Valve Trigger into the Inject Position will cause product to spray from Nozzle Tip.

Always wear proper Eye Protection and PPE

How to Operate the System

7. Move toggle valve to the right into the "inject" position to recycle product back into the backpack.

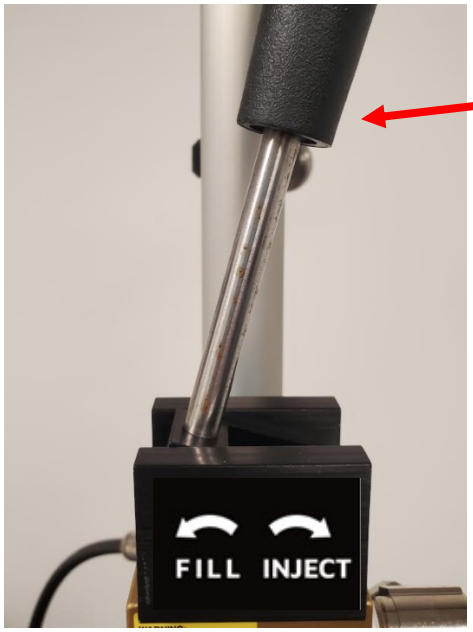

valve toggle in inject position

When system is in the "inject" position, the cylinder fluid piston and backpack will activate simultaneously, injecting product out of the nozzle and priming the supply line.

8. Begin Injection process by inserting the nozzle tip into the soil, and step on the footplate until it bottoms out on the ground floor. Repeat steps 5-7 to fill dose and dispense into pre-determined injection sites.

Cleaning the AccuFlo Soil Injector ISD System

CLEAN-jet Solution is an all-purpose cleaner and lubricant suitable for all Arborjet injection devices.

Recommended Flushing Process

1. Dispose of any remaining product in the FlowZone backpack according to product label or SDS sheet instructions
2. Pour around a half gallon of clean water, and 2-3oz of CLEAN-jet into the backpack sprayer
3. Set the dose sizer to 300mL (max capacity)
4. Disconnect the Drain Line from the bulkhead fitting
5. Place injection end of lance into a bucket
6. Initiate the fill and inject cycle until water runs clear.
7. Store AccuFlo Soil Injector ISD Lance and Backpack in a secure location protected from the elements in above-freezing conditions.

*****FREEZE WARNING*****

Even after flushing the system, some liquid may still remain in the cylinder which can freeze, causing the cylinder to rupture. If you are unable to store the device in above-freezing conditions, refer to our troubleshooting guide for instructions on how to completely drain the device.

Determining Volume and Number of Injection Sites

1. How to Determine the Diameter at Breast Height (in.)

Measure tree diameter in inches, at breast height by using a diameter tape, OR measure circumference and divide by Pi (3.1415).

Arborjet DBH" Measuring Tape

2. Carefully read label of Product to be Injected

Use Tree DBH", canopy size, or cubic volume of Shrub to determine total injection volume for treatment application.

You may also need to consider plant species, geographical location, or environmental/ soil conditions when considering how much product to inject.

When dosing calls for injection volumes indivisible by 10mL, it's recommended to apply at a lower rate in order to avoid phytotox or over-regulation.

3. Using the Graduated Cylinder provided with your Kit, measure the calculated product volume and pour into backpack reservoir.

It's recommended to fill backpack reservoir with water before mixing in product.

Calculating Dosage of Injection Sites

Divide the total volume to be applied by the number of injection sites to determine injection volume per site.

ex) 10,000mL total dose for 10" DBH tree / 10 Sites = 1000mL per site

The Soil Injector ISD can set dosage increments anywhere from 10mL to 300mL per injection. In the example above, we would suggest setting the dose to 200mL, and executing 5 injections per injection site.

(200mL: x 5 shots x 10 sites = 10,000mL total applied)

It is not uncommon for the total volume to be an odd number, so the applicator will have to find the ideal combination of injection sites and volume per injection to achieve the prescribed rate dosage.

ex) 1,925mL total dose for 14" DBH tree / 14 sites = 137.5mL per site

Since we can't set the dose sizer to 137.5mL, we can either adjust the number of sites, the volume injected per site, or both, if the total recommended rate is not exceeded.

For this example, I would suggest 16 sites @ a dose of 120mL = 1920mL

For further clarification, or assistance in determining injection site volume, contact your local distributor or Arborjet Regional Technical Manager.

Arborjet.com/rtm

How to Convert to Spray and Drench Applications

The modified FlowZone variable speed backpack can be easily converted for spray and drench applications.

Make sure backpack is turned off before initiating the steps below

1. Have a bucket nearby in case there is any remaining fluid in the drain line and disconnect supply line junction and the Quick Disconnect fitting from the Bulkhead port.

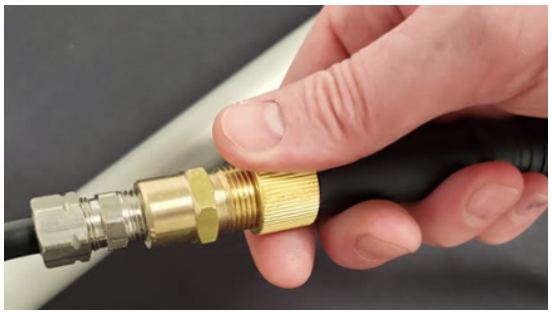

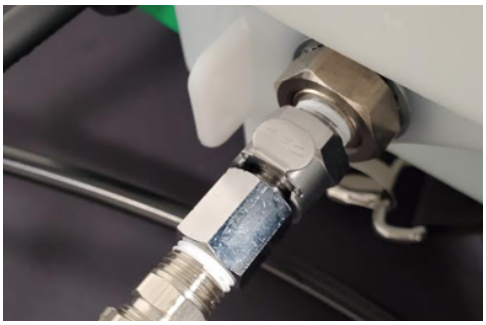

2. Thread sprayer wand, with the necessary fitting for the application, onto supply line coming from the backpack.

Troubleshooting Guide

In addition to the tips below, our YouTube channel is filled with informational videos that can help with issues that may arise. Youtube.com/@ArborjetEcologel/Playlists

- Difficulty Injecting into compact or clay soil
  - Lift the device up about an inch so there is space under the nozzle and try again. If that doesn't work, try unclogging the nozzle ports with a thin hex key or a paper clip
- Losing Prime on the backpack pump/Pump continuously pumps but does not build pressure to the device
  - Turn the backpack unit off, disconnect supply line, point it back into the backpack reservoir and turn it back on. Once the product is flowing again, turn the backpack back on and reconnect.
  - When you have almost depleted your product, make sure to keep the backpack level so the pump can dispense all of the liquid
- Leaks in tubing, valve, or cylinder connections
  - In order to repair leaks, you must remove the steel housing to expose the underlying assemblies. This will require two 7/16" wrenches for the lock nuts, and one 5/32" Allen Key for the Button Screws on the Housing Handle.
  - Visit our YouTube Channel for a step-by-step disassembly guide

Winterization Instructions

1. Disconnect ISD supply line and drain line tubing from AccuFlo tank.
2. Attach ISD supply line tubing (1/4" NPT- The shorter hose when detached) to a hand pump or compressor of your choice (Minimum of 10 PSI) using the supplied Winterization Adaptor*
3. Switch ISD into fill mode.
4. Turn on the compressor or operate the hand pump and allow water to flow out of the drain line.
5. Keep the compressor on or continue operating the hand pump through steps 6 and 7.
6. Switch ISD to inject mode and allow water to flow out of the ISD Nozzle.
7. Toggle back and forth between fill and inject mode until all of the water has been released.

The ISD can now be stored in temperatures below freezing.

If your device did not come with a supplied Winterization Adaptor, please visit: https://arborjet.com/contact/ to request one. Using the online form, select "General Info" as the Inquiry type and include "Need AccuFlo ISD Winterization Adaptor" in the comments section.

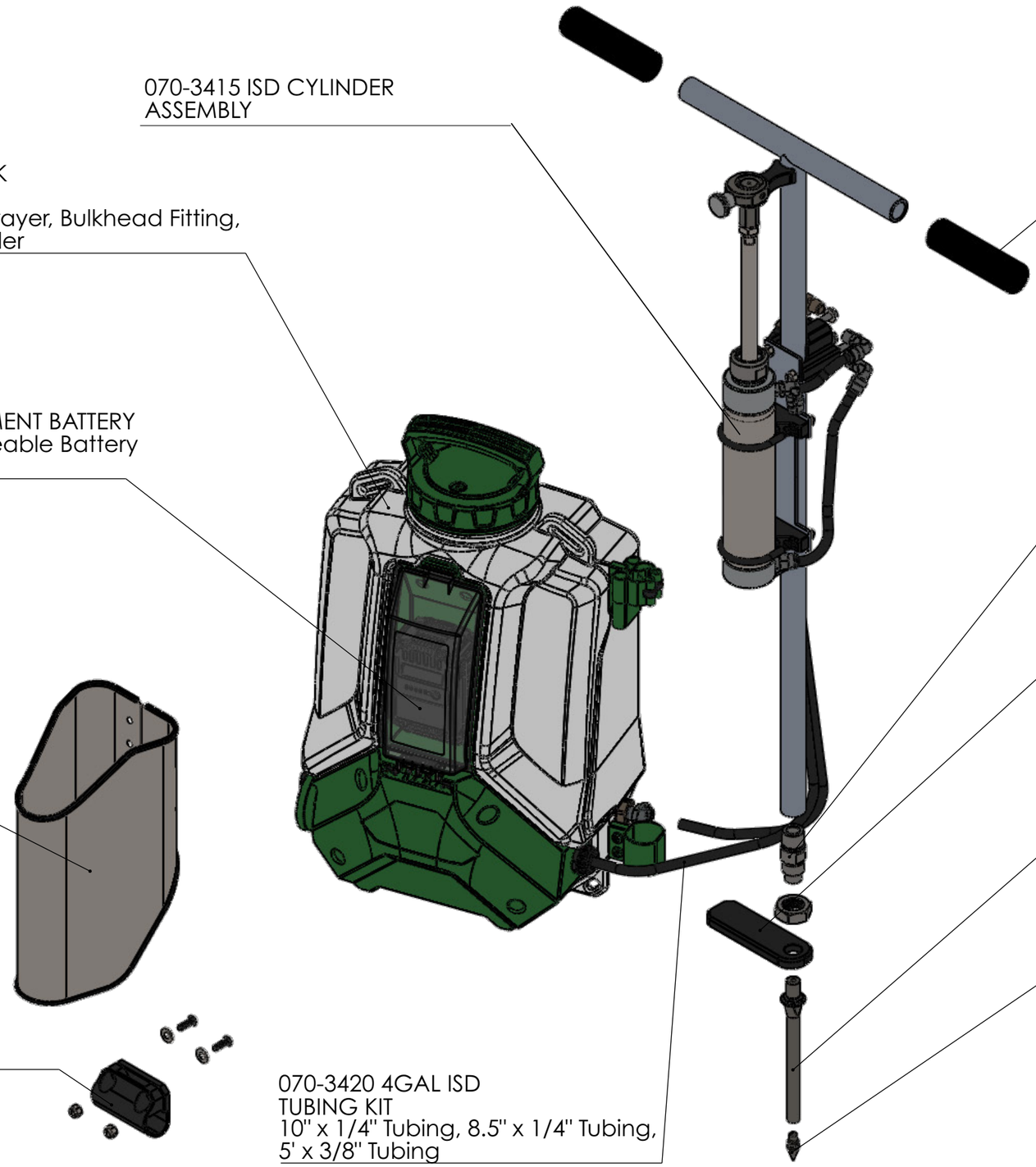
070-3415 ISD CYLINDER ASSEMBLY
070-3150 BACKPACK ASSEMBLY
4 Gal Backpack Sprayer, Bulkhead Fitting, Bulkhead QD Coupler
070-3425 REPLACEMENT BATTERY
18V Li-Ion Rechargeable Battery
070-3431 ROLLED HOUSING ASSEMBLY Stainless Steel Housing, Trim Guard, Logo Decals
070-3428 HOUSING HANDLE KIT
3D Printed Handle, (2)1/4" Locknut, (2)Brace Handle Bolt, (2) 1/4" Washers
070-3420 4GAL ISD TUBING KIT
10" x 1/4" Tubing, 8.5" x 1/4" Tubing, 5' x 3/8" Tubing
070-3422 HAND GRIPS(2)Hex Hand Grips
070-3430 LANCE ADAPTER KIT
Lance Adapter, 1/4" Compression Fitting, 21" x 3/8" Tubing
070-3421 FOOTPLATE KIT
Footplate, Nylon Gasket, Jam Nut (No Grip Tape)
070-3423 NOZZLE EXTENDER KIT 6" Lance Nozzle Extender
070-3424 NOZZLE 2PK KIT
(2) Nozzle Tip

ARBORJET®

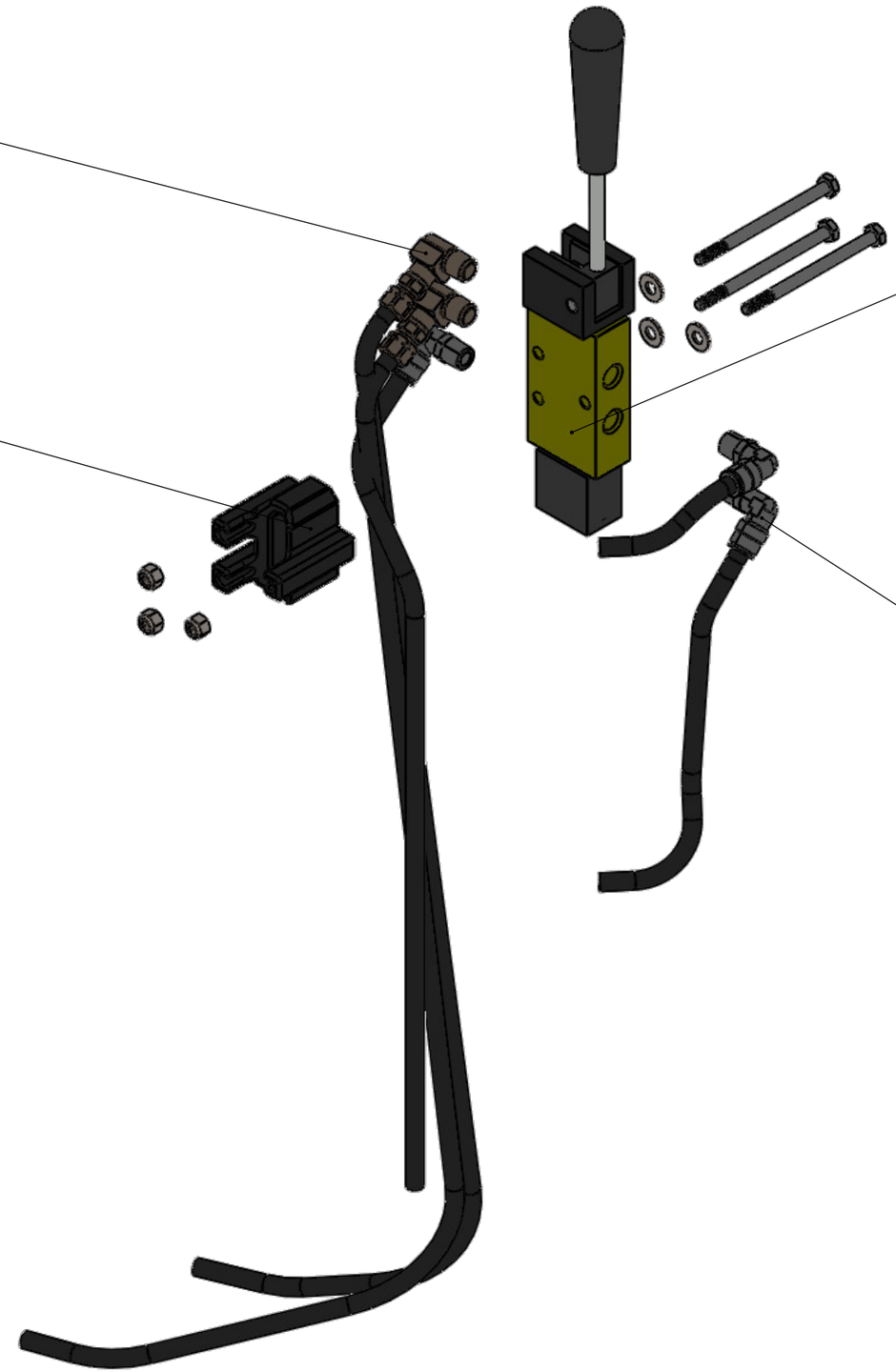
070-3414 ELBOW
3/8" PTC 3PK 3/8"
Elbow PTC
070-3412
VALVE ASSEMBLY KIT Valve, Valve
Handle, (2) 1/4" Elbow PTC, (3) 3/8"
Elbow PTC
070-3426 VALVE SPACER ...
Valve Spacer, (3) Valve Bolt, (3)
1/4" Lock Washer, (3) 1/4" Nut
070-3413 ELBOW
1/4" PTC 2PK (2) 1/4"
Elbow PTC

ARBORJET®

Contacting Arborjet

Arborjet, Inc.
99 Blueberry Hill Rd. Woburn,
MA 01801

Phone: 781-935-9070
Fax: 781-935-9080
info@arborjet.com

@arborjetecologel

ARBORJET®
Revolutionary Plant Health Solutions