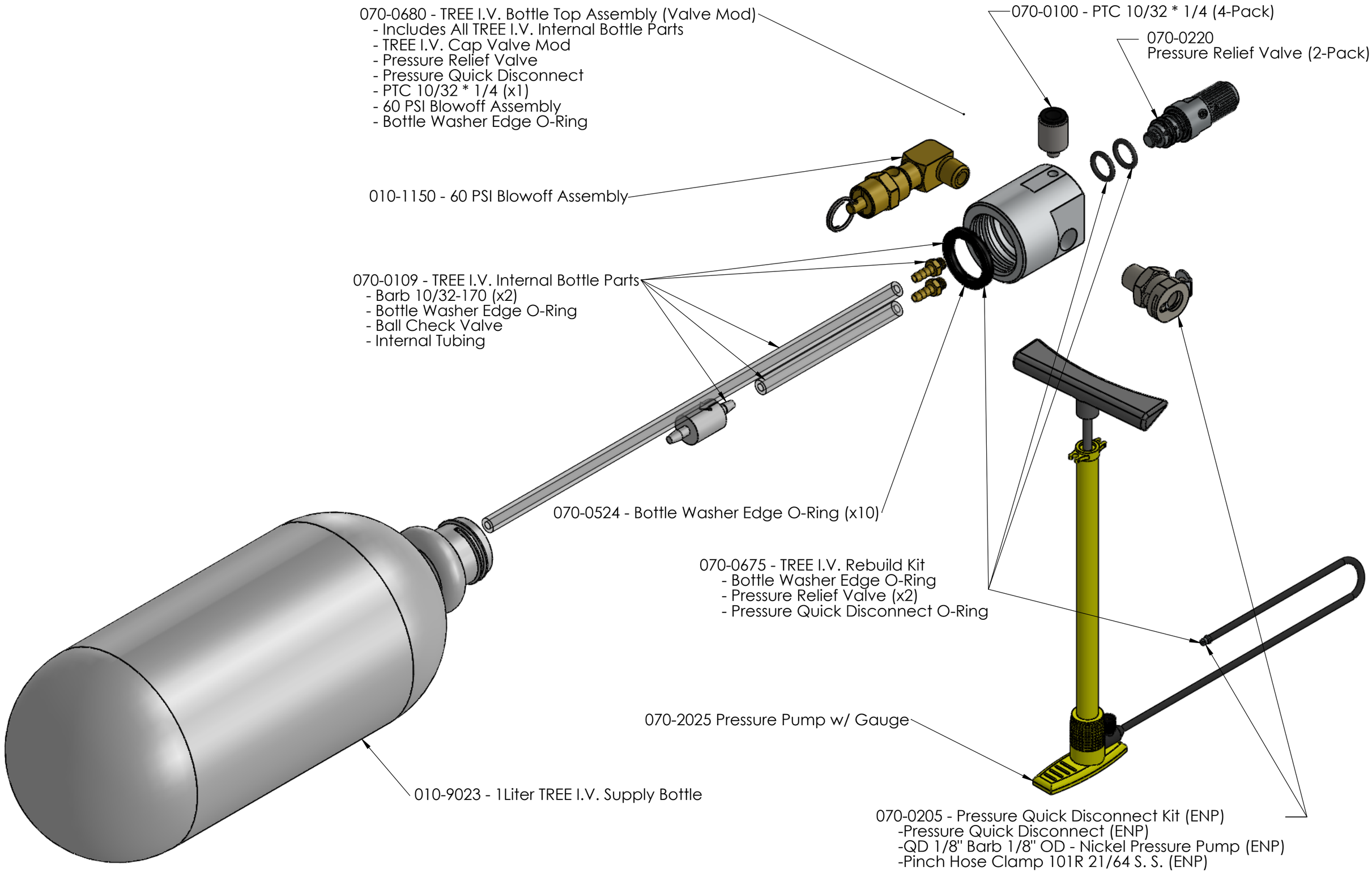
070-0680 - TREE I.V. Bottle Top Assembly (Valve Mod)
- Includes All TREE I.V. Internal Bottle Parts
- TREE I.V. Cap Valve Mod
- Pressure Relief Valve
- Pressure Quick Disconnect
- PTC 10/32 * 1/4 (x1)
- 60 PSI Blowoff Assembly
- Bottle Washer Edge O-Ring
070-0100 - PTC 10/32 * 1/4 (4-Pack)
070-0220
Pressure Relief Valve (2-Pack)
010-1150 - 60 PSI Blowoff Assembly
070-0109 - TREE I.V. Internal Bottle Parts
- Barb 10/32-170 (x2)
- Bottle Washer Edge O-Ring
- Ball Check Valve
- Internal Tubing
070-0524 - Bottle Washer Edge O-Ring (x10)
070-0675 - TREE I.V. Rebuild Kit
- Bottle Washer Edge O-Ring
- Pressure Relief Valve (x2)
- Pressure Quick Disconnect O-Ring
070-2025 Pressure Pump w/ Gauge
010-9023 - 1Liter TREE I.V. Supply Bottle
070-0205 - Pressure Quick Disconnect Kit (ENP)
-Pressure Quick Disconnect (ENP)
-QD 1/8" Barb 1/8" OD - Nickel Pressure Pump (ENP)
-Pinch Hose Clamp 101R 21/64 S. S. (ENP)